M,G ， ´

GIA 0338

Hydraulic Rock Drills

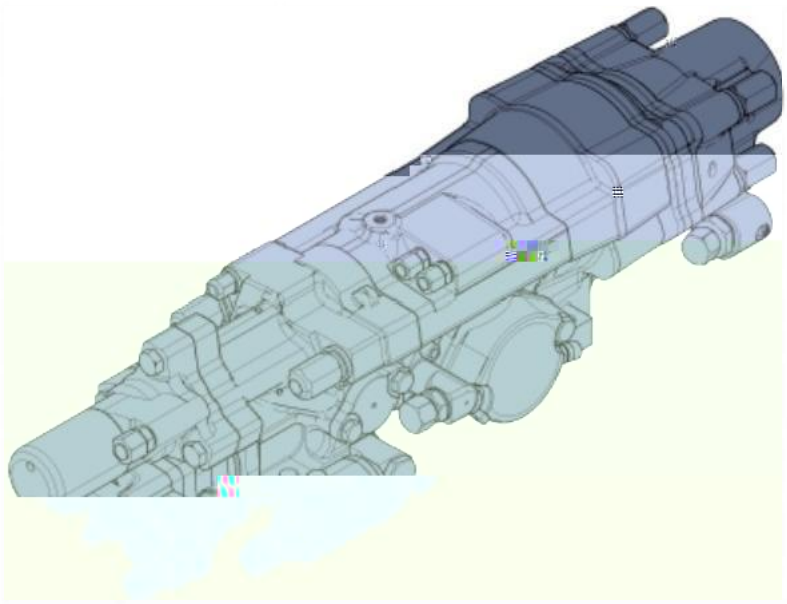

No.9460042010
Rev.001|2025-12
Valid for:GIA 03389460042010,9460042011,9460042012

Table of Content /

1. CH- ROCK DRILL / 5
ROCK DRILL / 11
CYLINDER / 15
HOUSING,SEAL / 19
HOUSING,SEAL / 21
INTERMEDIATE PART / 23
FRONT PART / 29
HOUSING,GEAR / 31
ROTATION CHUCK / 33
COVER / 35
ACCUMULATOR / 39
ACCUMULATOR / 41
ACCUMULATOR / 43
MOTOR,HYD / 45
SET,O-RING / 49
SET,MAINTENANCE / 51

CROSS REFERENCE LIST 59

CH- ROCK DRILL /
LIST OF CONTENTS

Part no	Description	See page Se sidan	Remarks Anmärkningar
-	CH- ROCK DRILL	8	
-	ROCK DRILL		

Part no	Description	See page Se sidan	Remarks Anmärkningar
5750 1950 06	INTERMEDIATE PART	23	
5750 1950 76	INTERMEDIATE PART		

5 ßp

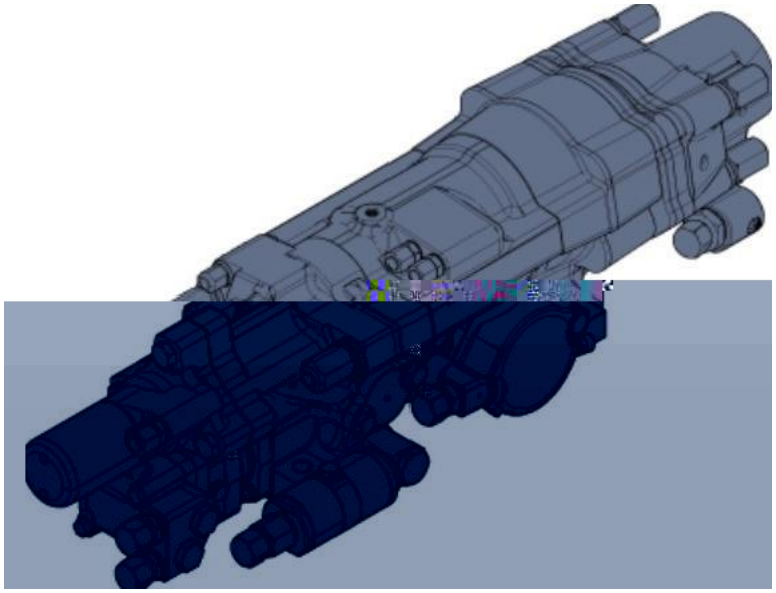

39

Ref.no	Part no	Qty Qty	Description	See page Se sidan	Remarks Anmärkningar
39	5750 1995 36	6	NUT,DOME		
40	5750 1996 78	6	WASHER,RING,ROUND		
41	5750 1995 29	1	PART,BACK		
42	5750 1995 93	1	NIPPLE		
43	5750 1995 94	1	CAP		
44	5750 1995 60	3	SCREW		
45	5750 1996 01	1	SET,O-RING		
46	5750 1950 45	1	SEAL		
47	5750 1950 46	2	O-RING		
48	5750 1950 47	1	O-RING		
49 50	5750 1996 54	1	SET,SEAL		
51	5750 1950 49	2	SEAL		
52	5750 1950 50	1	O-RING		
53	5750 1950 51	1	SEAL		
54	5750 1950 52	1	SEAL		
55	5750 1950 53	2	O-RING		
56	5750 1950 54	1	O-RING		
99	-	1	SET,MAINTENANCE		



Ref.no	Part no	Qty Qty	Description	See page Se sidan	Remarks Anmärkningar
1	5750 1995 25	1	CYLINDER		
2	5750 1995 46	4	STUD		
3	5750 1995 32	1	GUIDE		
4	5750 1995 47	1	INSERT,THREADED		
5	5750 1995 48	4	INSERT,THREADED		
6	5750 1995 40	3	INSERT,THREADED		
7	5750 1995 71	1	PLUG,END		
8	5750 1995 72	2	PLUG,SEAL		

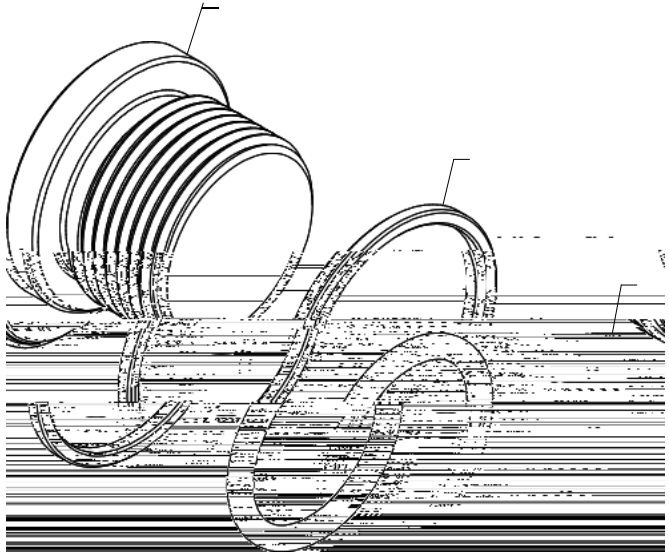

5750195062-01

Ref.no	Part no	Qty Qty	Description	See page Se sidan	Remarks Anmärkningar
1	5750 1951 51	1	PLUG,SEAL		
2	5750 1951 52	1	WASHER,RING		
3	5750 1951 53	1	O-RING		

ü7 µE‡ Ý

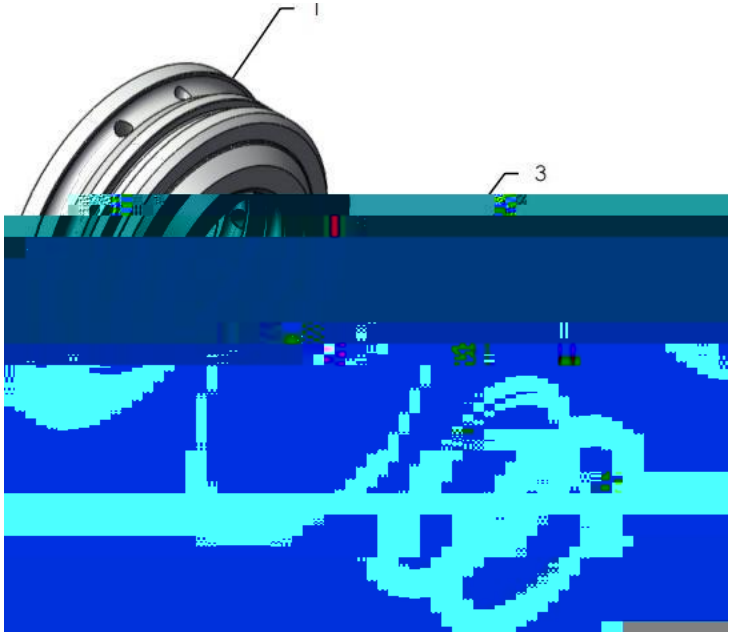

Ref.no	Part no	Qty Qty	Description	See page Se sidan	Remarks Anmärkningar
1	5750 1995 27	1	HOUSING,SEAL		
2	5750 1950 71	2	SEAL		
3	5750 1950 72	1	O-RING		

ü7 µE‡ Ý

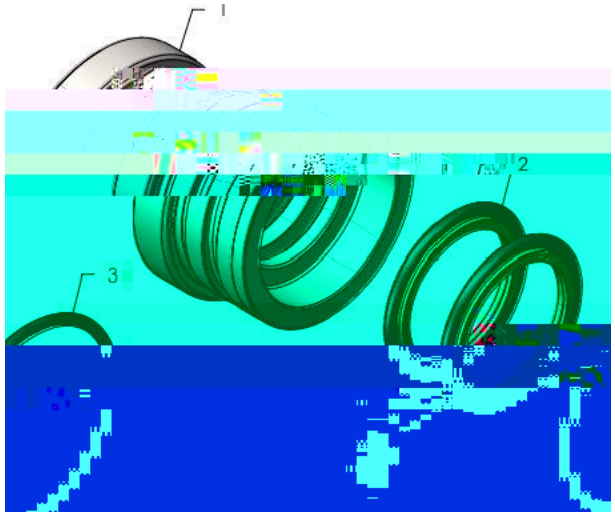

Ref.no	Part no	Qty Qty	Description	See page Se sidan	Remarks Anmärkningar
1	5750 1995 26	1	HOUSING,SEAL		
2	5750 1950 74	2	SEAL		
3	5750 1950 75	1	O-RING		

INTERMEDIATE PART/ **cL***

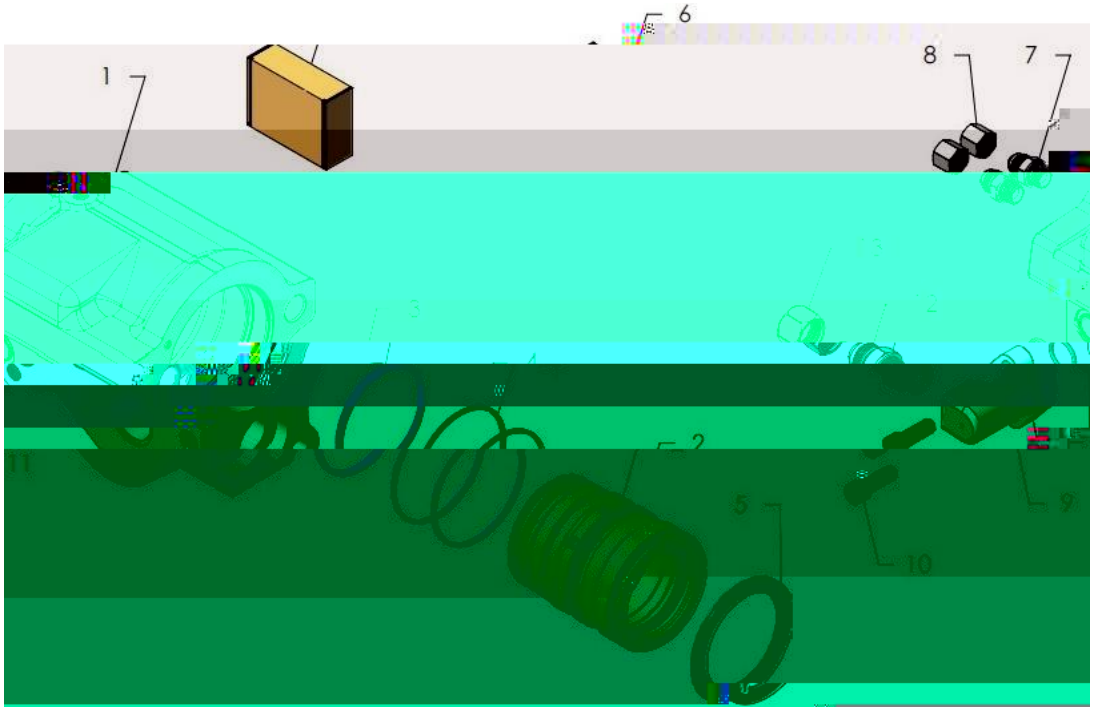

INTERMEDIATE PART / 5750 1950 06

Ref.no	Part no	Qty	Description	See page	Remarks
		Qty		Se sidan	Anmärkningar



5750195076-01

Ref.no	Part no	Qty	Description	See page	Remarks
		Qty		Se sidan	Anmärkningar
1	5750 1995 18	1			

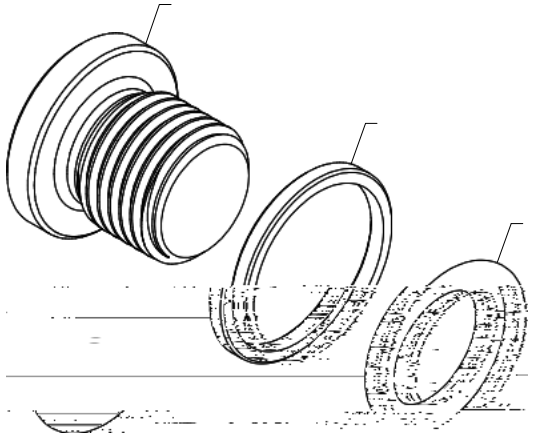

5750195155-01

Ref.no	Part no	Qty	Description	See page	Remarks
		Qty		Se sidan	Anmärkningar
1	5750 1951 62				

)

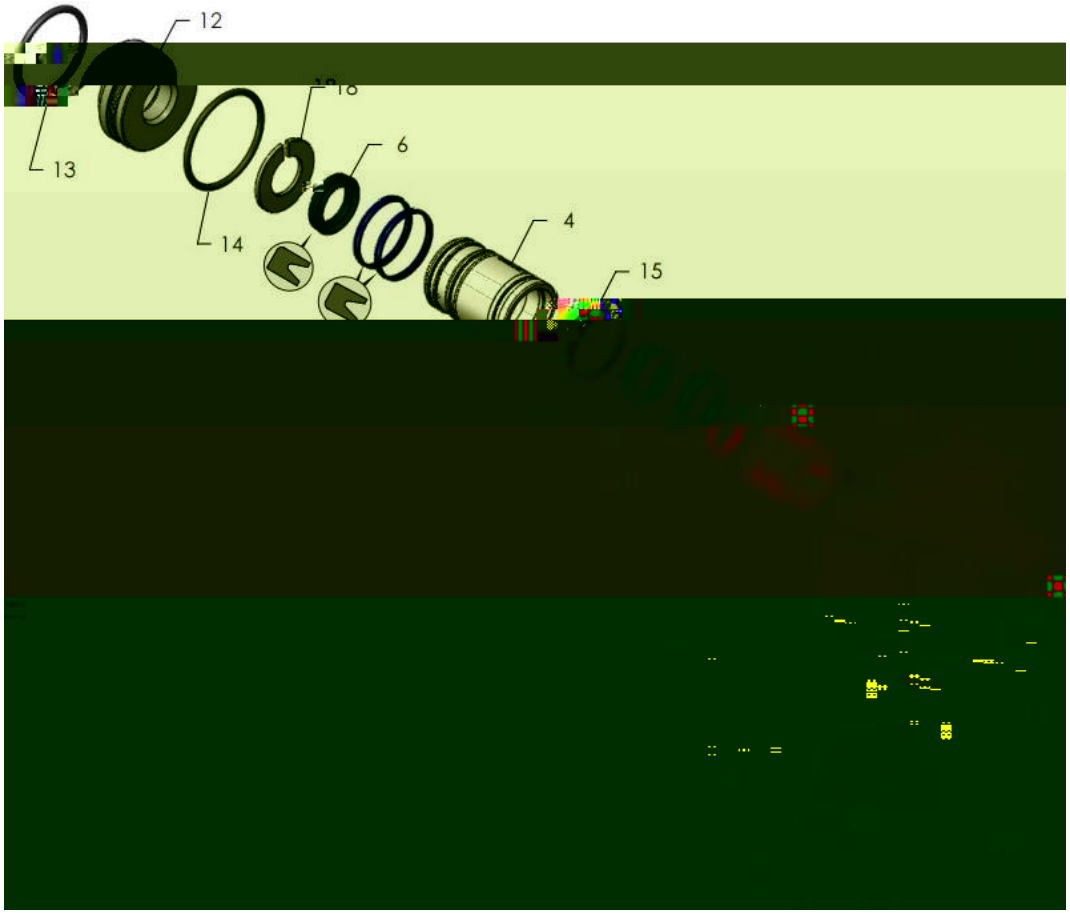
12
18
6
13
14
4
15

Ref.no	Part no	Qty Qty	Description	See page Se sidan	Remarks Anmärkningar
1	5750 1995 16	1	FRONT PART		
2	5750 1995 41	2	INSERT,THREADED		
3	5750 1995 08	1	GUIDE		
4	5750 1995 10	1	FLUSHING HEAD		
5	5750 1996 42	2	SEAL,CUP		
6	5750 1996 43	1	SEAL,CUP		
7	5750 1995 63	1	PLATE,CONNECTING		
8	5750 1996 46	1	SEAL		
9	5750 1995 51	2	SCREW		
10	5750 1995 52	2	WASHER,LOCKING		
11	5750 1950 45	1	SEAL		
12	5750 1995 09	1	STOP RING		
13	5750 1950 98	1	O-RING		
14	5750 1950 99	1	O-RING		
15	5750 1951 00	3	SEAL		
16	5750 1995 84	1	NIPPLE		
17	5750 1995 83	1	CAP		
18	5750 1995 53	1	SPACER		
19	5750 1951 03	1	WIPER		
20	5750 1995 71	1	PLUG,END		

UıE⁄1ç)



Ref.no	Part no	Qty Qty	Description	See page Se sidan	Remarks Anmärkningar
1	5750 1995 24	1	HOUSING,GEAR		
2	5750 1995 54	1	PLUG,END		
3	5750 1995 55	1	NIPPLE,GREASE		
4	5750 1951 07	1	SEAL		
5	5750 1996 75	1	CIRCLIP		
6	5750 1995 21	4	STUD		
7	5750 1996 76	1	WASHER,RING,ROUND		
8	5750 1995 47	4	INSERT,THREADED		